Built To Last
Since 1985

PLEXIDOR®
Performance Dog Doors™

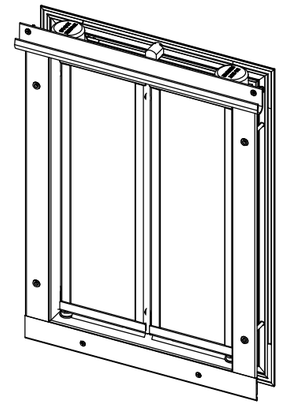

L F Schmidt

L. F. SCHMIDT
LICENSE
No. 43409
STATE OF FLORIDA
PROFESSIONAL ENGINEER

Digitally signed by Lyndon F Schmidt
Date: 2026.07.02 11:53:06 -04'00'

This item has been digitally signed and sealed by **L. F. Schmidt, P.E.** on the date adjacent to the seal.

Printed copies of this document are not considered signed and sealed and the signature must be verified on any electronic copies.

THIS PRODUCT APPROVAL IS VALID ONLY FOR THE STATE OF FLORIDA

PD DOOR MOUNT DOG DOOR in a FIBERGLASS ENTRY DOOR

INSWING / OUTSWING "NON-IMPACT"

GENERAL NOTES

1. This product has been evaluated and is in compliance with the 9th Edition (2026) Florida Building Code (FBC) structural requirements excluding the "High Velocity Hurricane Zone" (HVHZ).
2. Product anchors shall be as listed and spaced as shown on details. Anchor embedment to base material shall be beyond wall dressing or stucco.
3. When used in areas requiring wind borne debris protection, this product is required to be protected with an impact resistant covering that complies with FBC Sections 1609.1.2 & R301.2.1.2.
4. For 2x stud framing construction, anchoring of these units shall be the same as that shown for 2x buck masonry construction.
5. Site conditions that deviate from the details of this drawing require further engineering analysis by a licensed engineer or registered architect.

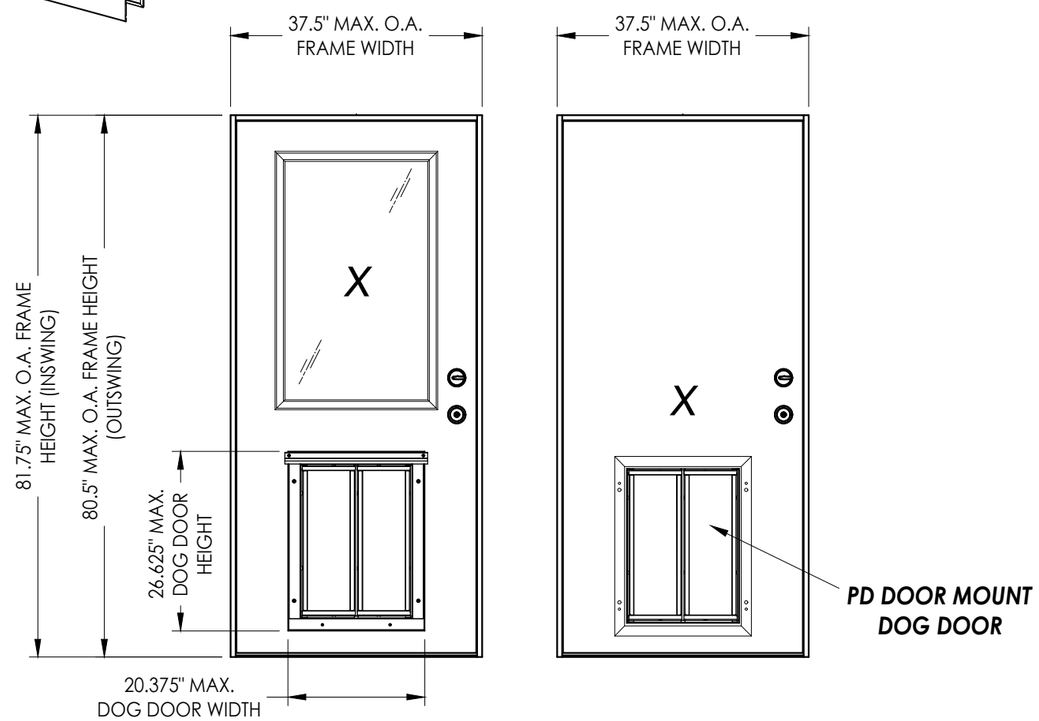

EXTERIOR VIEW
GLAZED DOOR

INTERIOR VIEW
OPAQUE DOOR

MAX. DOOR FRAME DIMENSION	MAX. PD DOG DOOR ASSEMBLY SIZE	DESIGN PRESSURE (PSF) INSWING		DESIGN PRESSURE (PSF) OUTSWING	
		POSITIVE	NEGATIVE	POSITIVE	NEGATIVE
37.5" x 81.75"	20.375" x 26.625"	+50.0	-50.0	+50.0	-50.0

TABLE OF CONTENTS

SHEET #	DESCRIPTION
1	Typical Elevations, Design Pressures & General Notes
2	Door Panel Details
3	Lite Frame Details
4	PD Dog Door Details
5	Horizontal & Vertical Cross Sections (2X Buck)
5	Horizontal & Vertical Cross Sections (1X Buck)
7	Horizontal & Vertical Cross Sections (Direct to Masonry)
8	Vertical Cross Sections (Thresholds)
9	Buck & Frame Anchoring
10	Bill of Materials & Components

Documents Prepared By:
Lyndon F. Schmidt
P.E. No. 43409
RW BUILDING CONSULTANTS, INC.
P.O. Box 230, Valrico, FL 33595
Phone No.: 813.659.9197
FBPE Registry No. 9813

PRODUCT: *PDUSA, INC. PD DOOR MOUNT*

PART OR ASSEMBLY: *TYPICAL ELEVATION, DESIGN PRESSURES & GENERAL NOTES*

NO.	DATE	REVISIONS	BY
2	7/01/26	UPDATE TO 9TH ED. (2026) FBC	LFS
1	10/4/23	UPDATE TO 8TH ED. (2023) FBC	LFS

DATE: 12/05/22
SCALE: N.T.S.
DWG. BY: RW
CHK. BY: LFS
DRAWING NO.: FL-41814.1
SHEET 1 OF 10

© 2022 R.W. BUILDING CONSULTANTS INC.

G:\PDUSA\FL-41814 R2\FL-41814.1.dwg

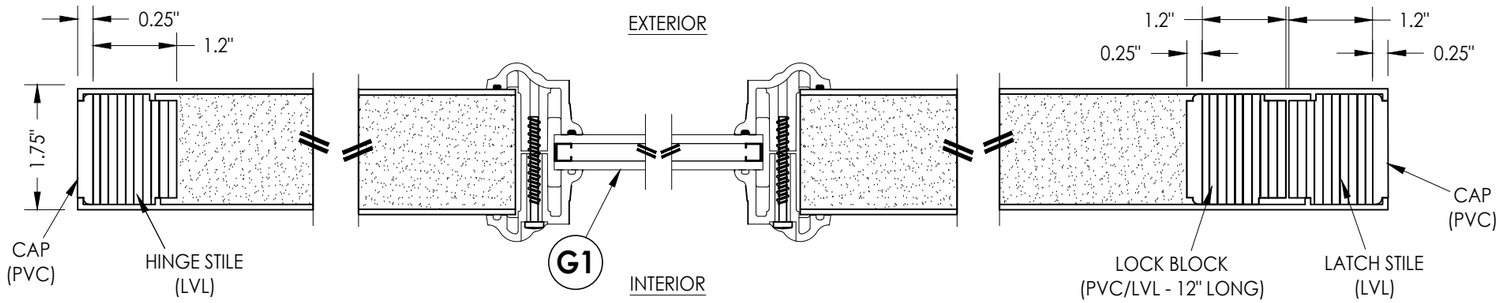

1/2 **HORIZONTAL CROSS SECTION**

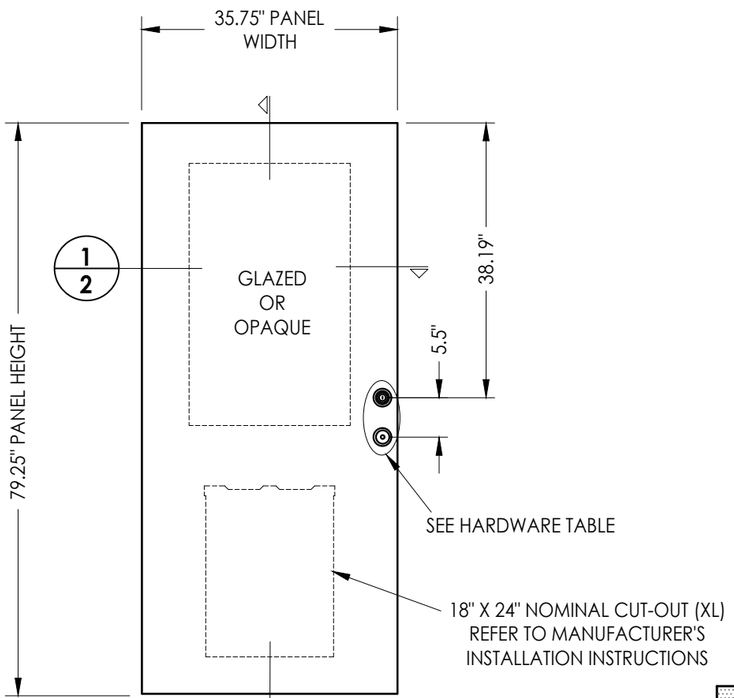

2/2

40 **DOOR PANEL**
JELD-WEN FIBERGLASS

FIBERGLASS DOOR SKIN: MIN. 0.070" THK.
CORE MATERIAL: POLYURETHANE FOAM

HARDWARE TABLE		
MANUFACTURER	MODEL	
SCHLAGE	KNOB:	F51
	DEADBOLT:	B60
KWIKSET	KNOB:	SIGNATURE SERIES
	DEADBOLT:	SIGNATURE SERIES (980)

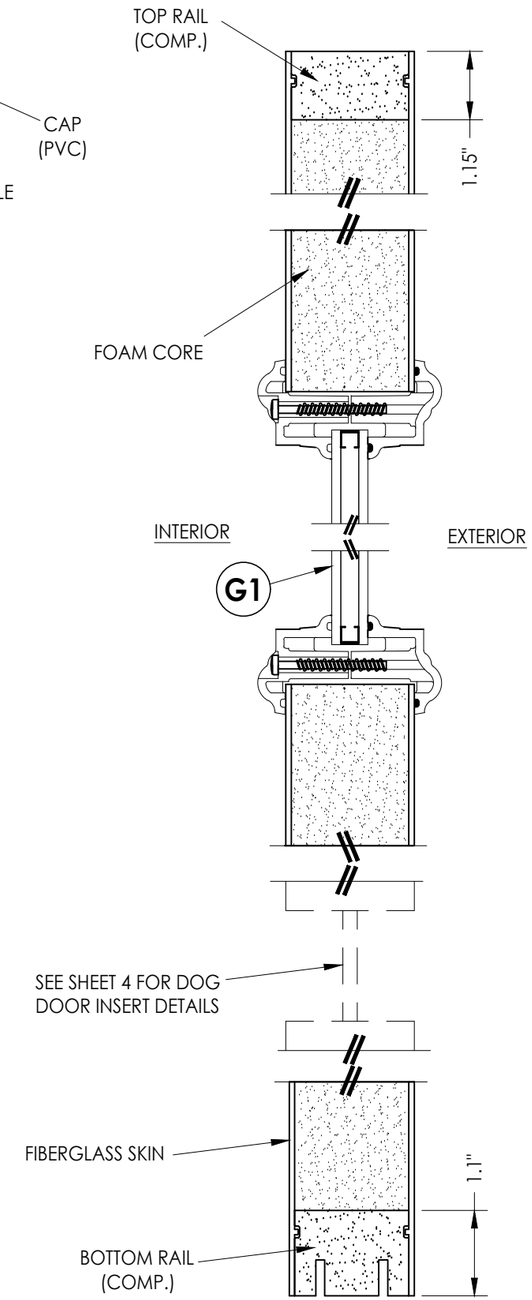

2/2 **VERTICAL CROSS SECTION**

Documents Prepared By:
Lyndon F. Schmidt
P.E. No. 43409
RW BUILDING CONSULTANTS, INC.
P.O. Box 230, Valrico, FL 33595
Phone No.: 813.659.9197
FBPE Registry No. 9813

PRODUCT: PDUSA, INC. PD DOOR MOUNT

PART OR ASSEMBLY: DOOR PANEL DETAILS

REVISIONS

NO.	DATE			BY
2	7/01/26	UPDATE TO 9TH ED. (2026)	FBC	LFS
1	10/4/23	UPDATE TO 8TH ED. (2023)	FBC	LFS

DATE: 12/05/22
SCALE: N.T.S.
DWG. BY: RW
CHK. BY: LFS
DRAWING NO.: FL-41814.1
SHEET 2 OF 10

© 2022 R.W. Building Consultants Inc.

G:\PDUSA\FL-41814 R2\FL-41814.1.dwg

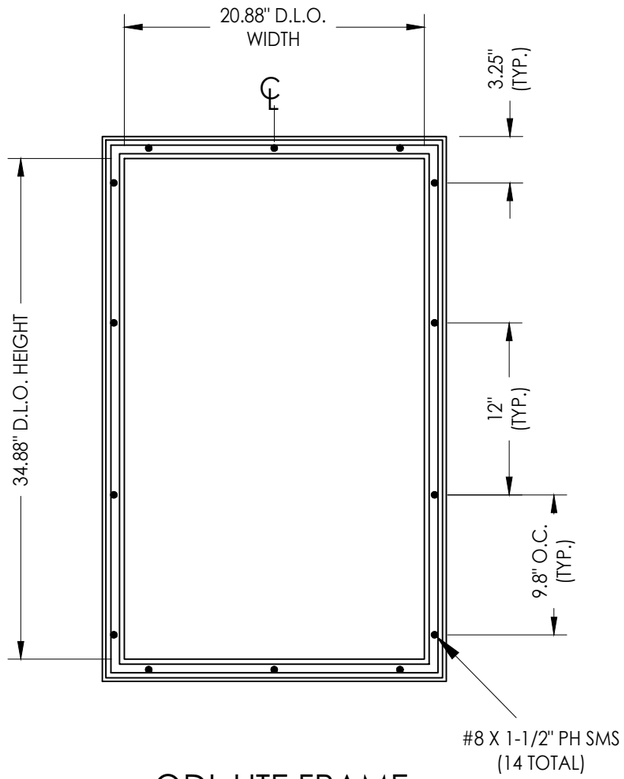

ODL LITE FRAME

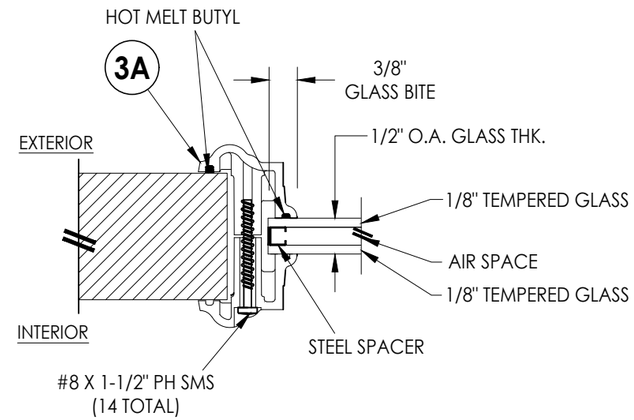

G1 ***GLAZING DETAIL***
ODL LITE FRAME
HP POLYPROPYLENE

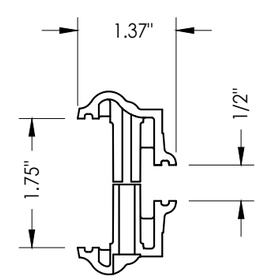

ODL LITE FRAME
HP POLYPROPYLENE

Documents Prepared By:
Lyndon F. Schmidt
P.E. No. 43409

RW BUILDING CONSULTANTS, INC.
P.O. Box 230, Valrico, FL 33595
Phone No.: 813.659.9197
FBPE Registry No. 9813

PRODUCT: *PDUSA, INC. PD DOOR MOUNT*

PART OR ASSEMBLY: *LITE FRAME DETAILS*

NO.	DATE	BY
2	7/01/26	UPDATE TO 9TH ED. (2026) FBC LFS
1	10/4/23	UPDATE TO 8TH ED. (2023) FBC LFS

REVISIONS

DATE: 12/05/22
SCALE: N.T.S.
DWG. BY: RW
CHK. BY: LFS
DRAWING NO.: FL-41814.1
SHEET 3 OF 10

© 2022 R.W. Building Consultants Inc.

G:\PDUSA\FL-41814 R2\FL-41814.1.dwg

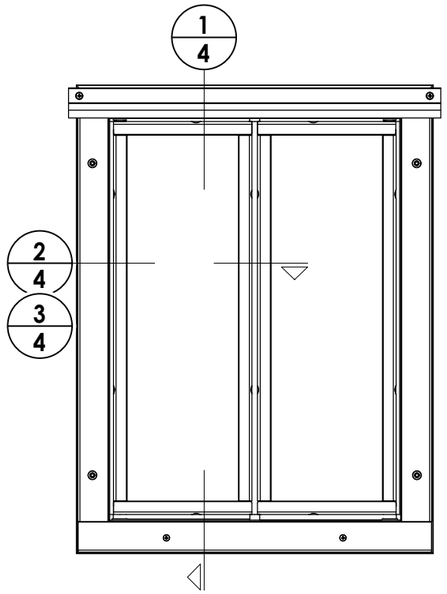

PD DOOR MOUNT

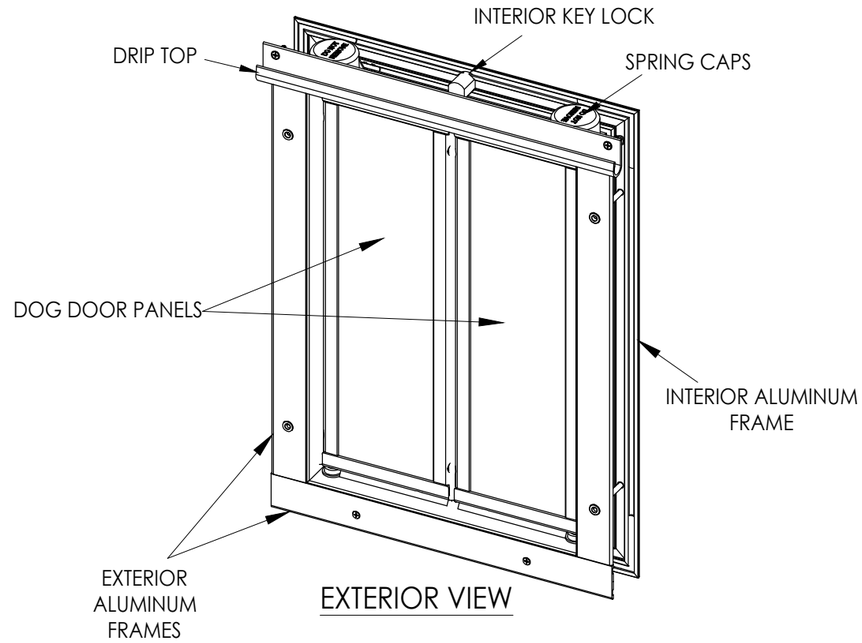

EXTERIOR VIEW

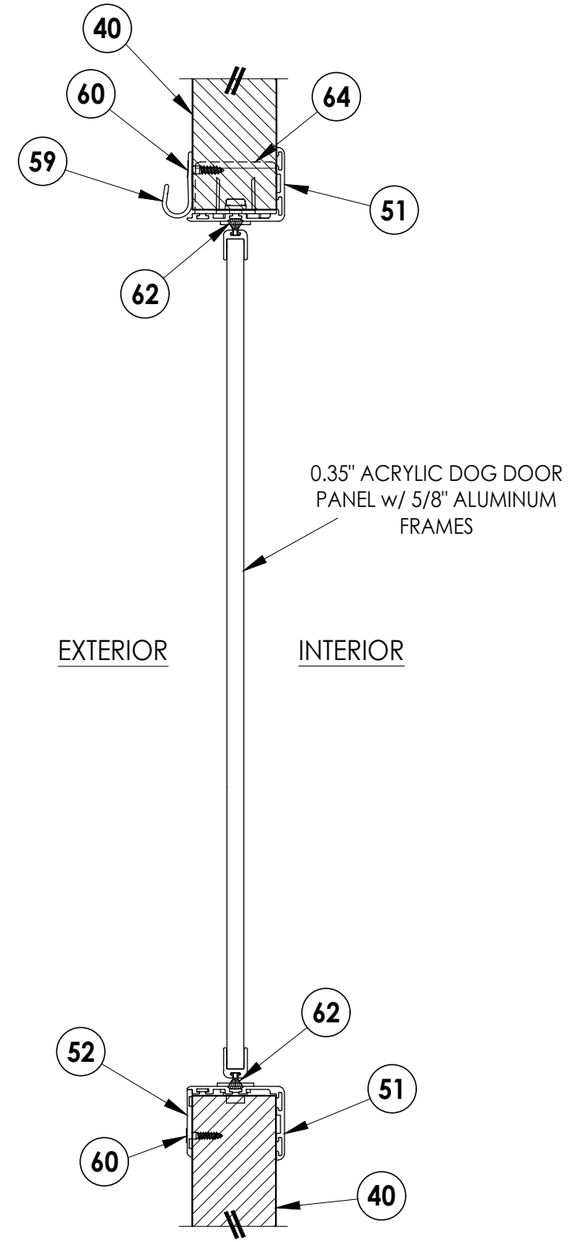

1/4 **VERTICAL CROSS SECTION**

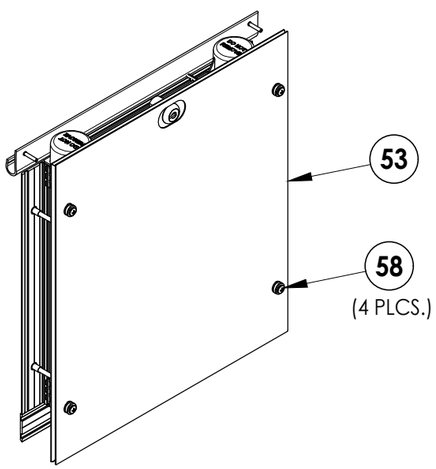

INTERIOR SECURITY COVER
OPTIONAL

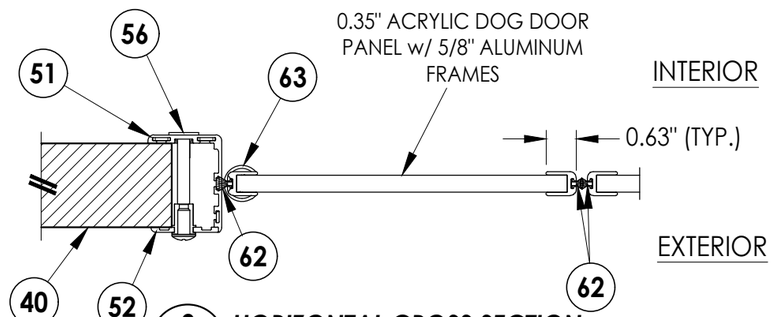

2/4 **HORIZONTAL CROSS SECTION**
FOR PLEXIDOR SIZES LGP & XL
(UP TO 20.375" X 26.625")

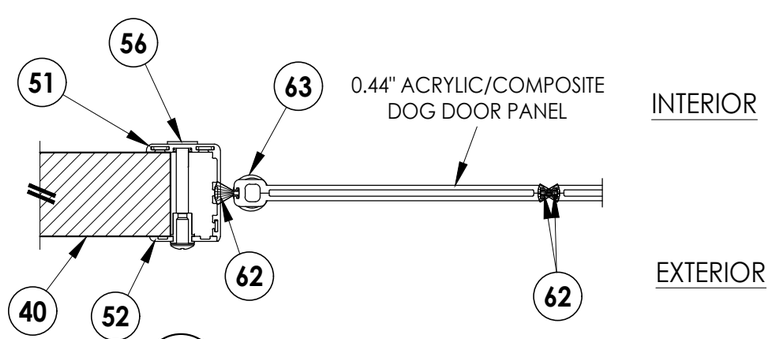

3/4 **HORIZONTAL CROSS SECTION**
FOR PLEXIDOR SIZES LG & MD
(UP TO 16.44" X 19.19")

Documents Prepared By:
Lyndon F. Schmidt
P.E. No. 43409

RW BUILDING CONSULTANTS, INC.
P.O. Box 230, Valrico, FL 33595
Phone No.: 813.659.9197
FBPE Registry No. 9813

PRODUCT: PDUSA, INC. PD DOOR MOUNT

PART OR ASSEMBLY: PD DOG DOOR DETAILS

NO.	DATE	REVISIONS	BY
2	7/01/26	UPDATE TO 9TH ED. (2026) FBC	LFS
1	10/4/23	UPDATE TO 8TH ED. (2023) FBC	LFS

DATE: 12/05/22
SCALE: N.T.S.
DWG. BY: RW
CHK. BY: LFS
DRAWING NO.: FL-41814.1
SHEET 4 OF 10

© 2022 R.W. Building Consultants Inc.

G:\PDUSA\FL-41814 R2\FL-41814.1.dwg

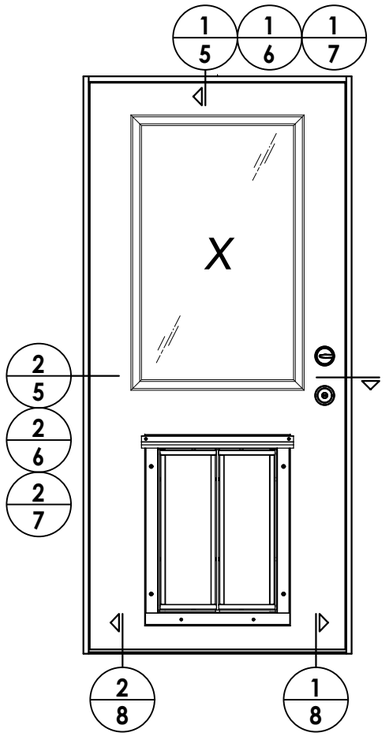

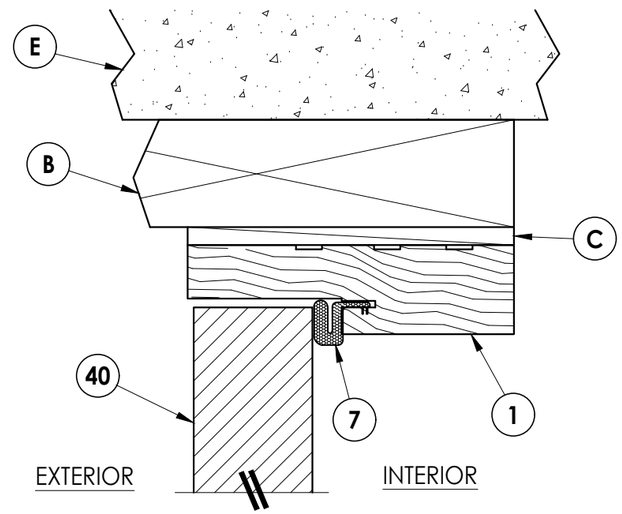

1/5 ***VERTICAL CROSS SECTION***
Outswing shown (Inswing similar)

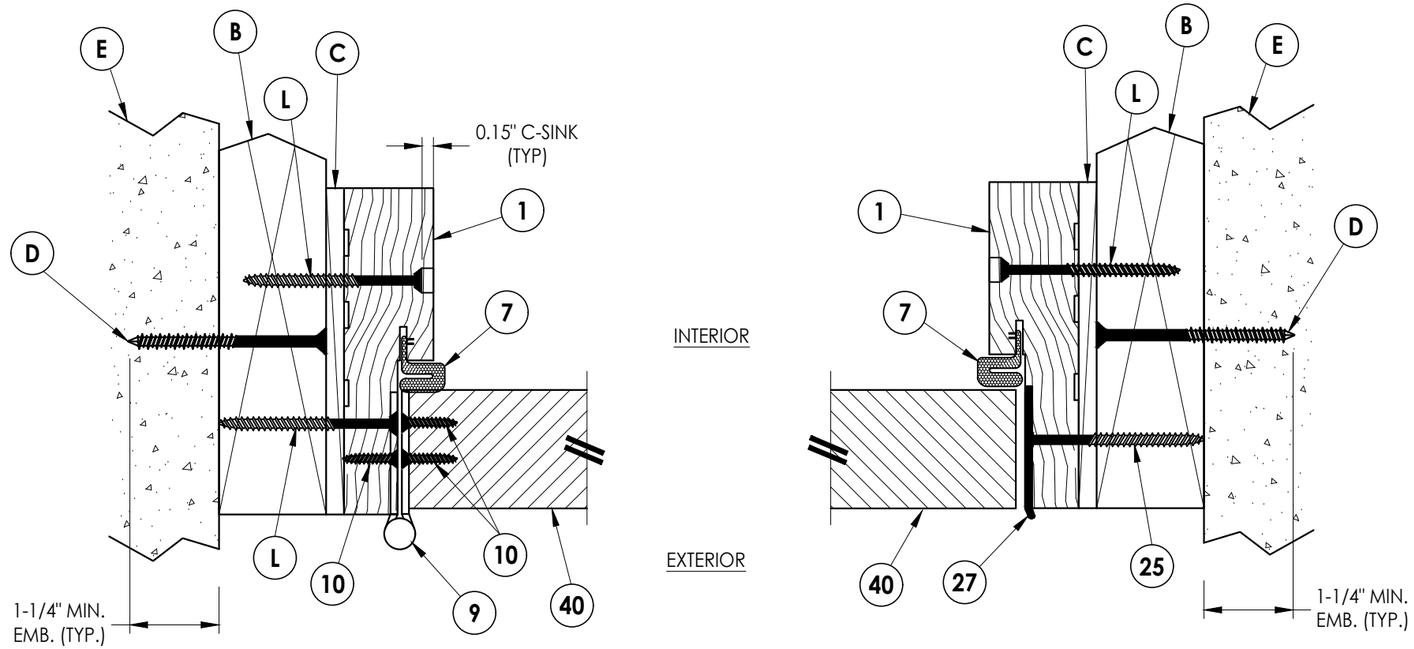

2/5 ***HORIZONTAL CROSS SECTION***
Outswing shown (Inswing similar)

Documents Prepared By:
Lyndon F. Schmidt
P.E. No. 43409

RW BUILDING CONSULTANTS, INC.
P.O. Box 230, Valrico, FL 33595
Phone No.: 813.659.9197
FBPE Registry No. 9813

PRODUCT: *PDUSA, INC. PD DOOR MOUNT*

PART OR ASSEMBLY: *HORIZONTAL & VERTICAL CROSS SECTIONS (2X BUCK)*

NO.	DATE	REVISIONS	BY
2	7/01/26	UPDATE TO 9TH ED. (2026) FBC	LFS
1	10/4/23	UPDATE TO 8TH ED. (2023) FBC	LFS

DATE: 12/05/22
SCALE: N.T.S.
DWG. BY: RW
CHK. BY: LFS
DRAWING NO.: FL-41814.1
SHEET 5 OF 10

© 2022 R.W. Building Consultants Inc.

G:\PDUSA\FL-41814 R2\FL-41814.1.dwg

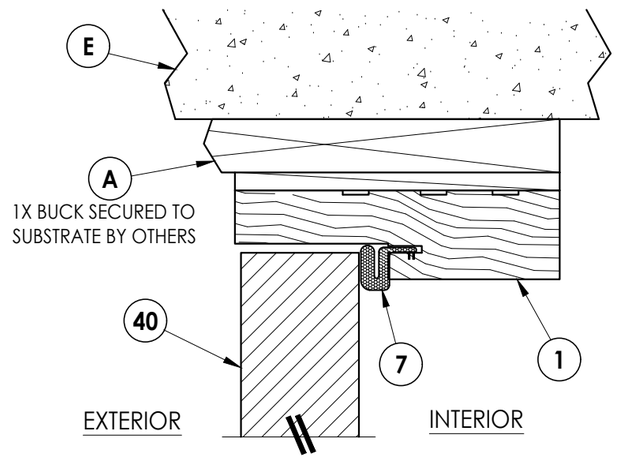

1/6 VERTICAL CROSS SECTION
Outswing shown (Inswing similar)

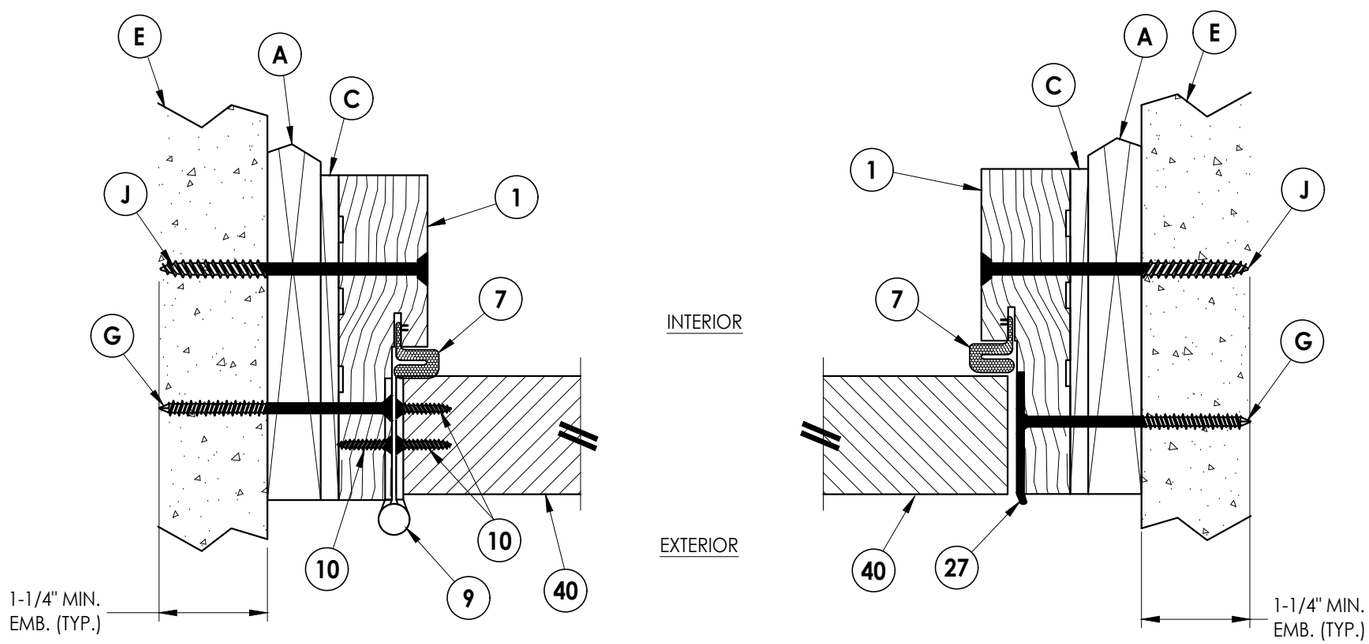

2/6 HORIZONTAL CROSS SECTION
Outswing shown (Inswing similar)

Documents Prepared By:
Lyndon F. Schmidt
P.E. No. 43409
RW BUILDING CONSULTANTS, INC.
P.O. Box 230, Valrico, FL 33595
Phone No.: 813.659.9197
FBPE Registry No. 9813

PRODUCT: PDUSA, INC. PD DOOR MOUNT

PART OR ASSEMBLY: HORIZONTAL & VERTICAL CROSS SECTIONS (1X BUCK)

NO.	DATE	REVISIONS	BY
2	7/01/26	UPDATE TO 9TH ED. (2026) FBC	LFS
1	10/4/23	UPDATE TO 8TH ED. (2023) FBC	LFS

DATE: 12/05/22
SCALE: N.T.S.
DWG. BY: RW
CHK. BY: LFS
DRAWING NO.: FL-41814.1
SHEET 6 OF 10

© 2022 R.W. Building Consultants Inc.

G:\PDUSA\FL-41814 R2\FL-41814.1.dwg

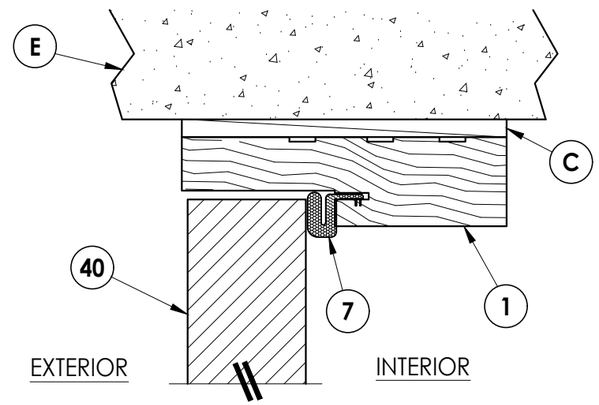

1/7 **VERTICAL CROSS SECTION**
Outswing shown (Inswing similar)

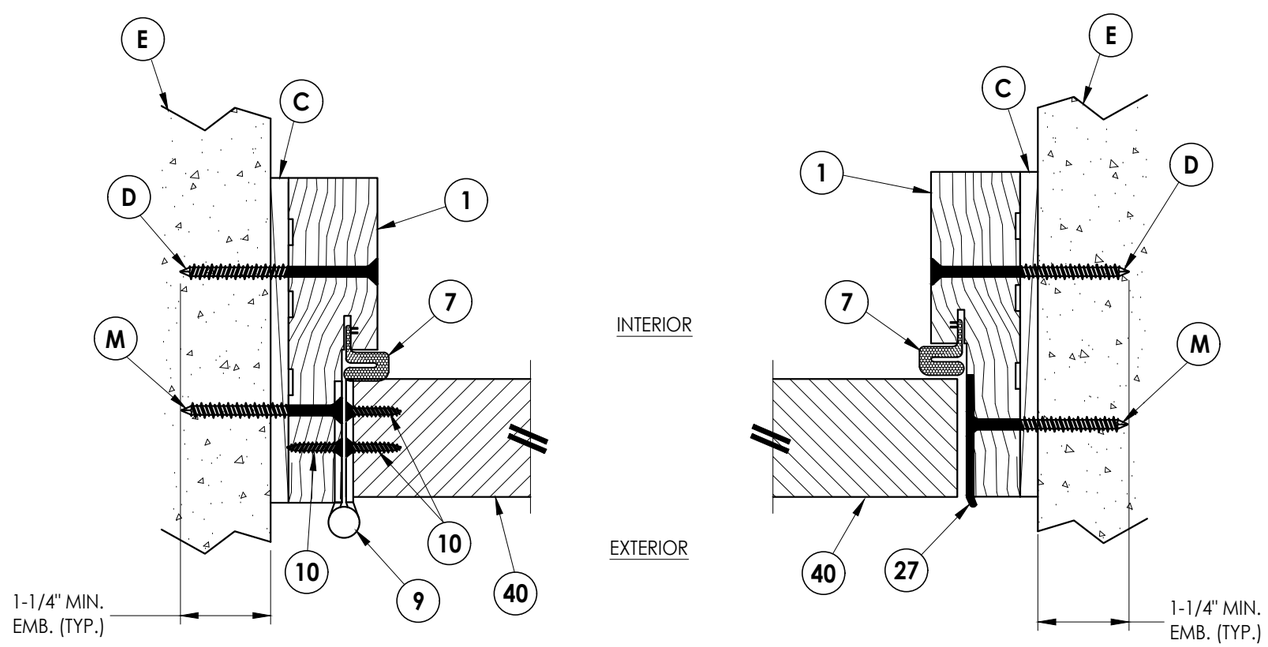

2/7 **HORIZONTAL CROSS SECTION**
Outswing shown (Inswing similar)

Documents Prepared By:
Lyndon F. Schmidt
P.E. No. 43409

RW BUILDING CONSULTANTS, INC.
P.O. Box 230, Valrico, FL 33595
Phone No.: 813.659.9197
FBPE Registry No. 9813

PRODUCT: PDUSA, INC. PD DOOR MOUNT

PART OR ASSEMBLY: HORIZONTAL & VERTICAL CROSS SECTIONS (DIRECT TO MASONRY)

NO.	DATE	REVISIONS	BY
2	7/01/26	UPDATE TO 9TH ED. (2026) FBC	LFS
1	10/4/23	UPDATE TO 8TH ED. (2023) FBC	LFS

DATE: 12/05/22
SCALE: N.T.S.
DWG. BY: RW
CHK. BY: LFS
DRAWING NO.: FL-41814.1
SHEET 7 OF 10

© 2022 R.W. Building Consultants Inc.

G:\PDUSA\FL-41814 R2\FL-41814.1.dwg

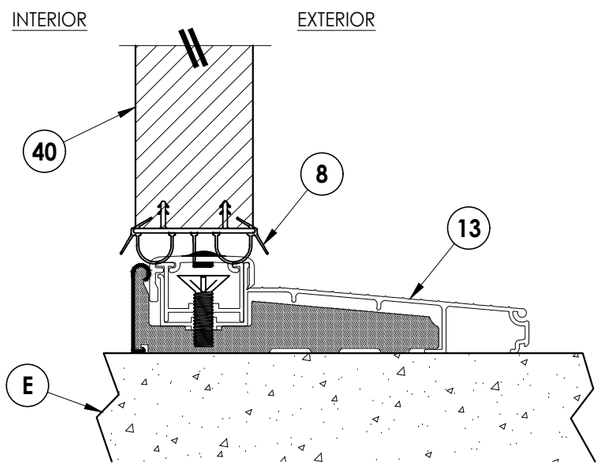

1/8 VERTICAL CROSS SECTION
Inswing Threshold

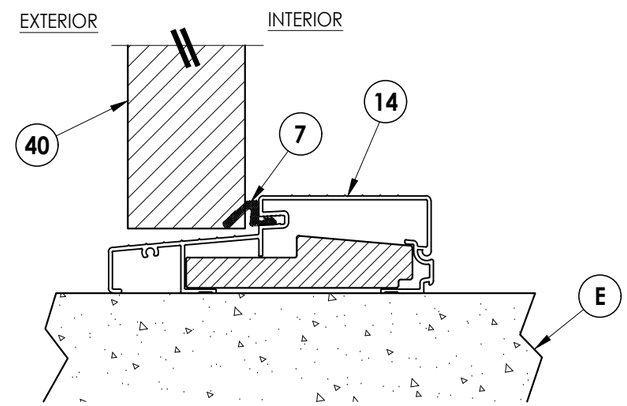

2/8 VERTICAL CROSS SECTION
Outswing Threshold

Documents Prepared By:
Lyndon F. Schmidt
P.E. No. 43409

RW BUILDING CONSULTANTS, INC.
P.O. Box 230, Valrico, FL 33595
Phone No.: 813.659.9197
FBPE Registry No. 9813

PRODUCT: PDUSA, INC. PD DOOR MOUNT

PART OR ASSEMBLY: VERTICAL CROSS SECTIONS (THRESHOLDS)

NO.	DATE	REVISIONS	BY
2	7/01/26	UPDATE TO 9TH ED. (2026) FBC	LFS
1	10/4/23	UPDATE TO 8TH ED. (2023) FBC	LFS

DATE: 12/05/22
SCALE: N.T.S.
DWG. BY: RW
CHK. BY: LFS
DRAWING NO.: FL-41814.1
SHEET 8 OF 10

© 2022 R.W. Building Consultants Inc.

G:\PDUSA\FL-41814 R2\FL-41814.1.dwg

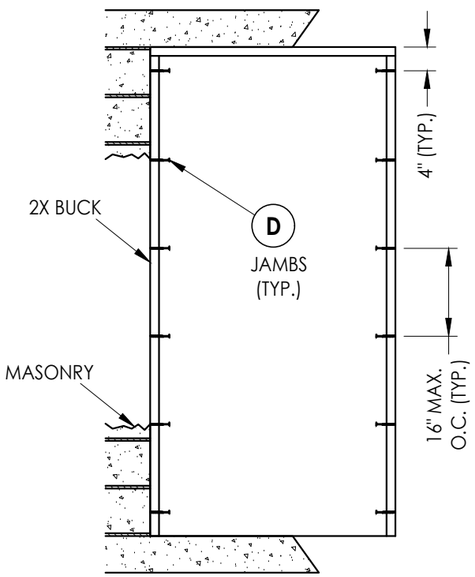

X

2X BUCK ANCHORING

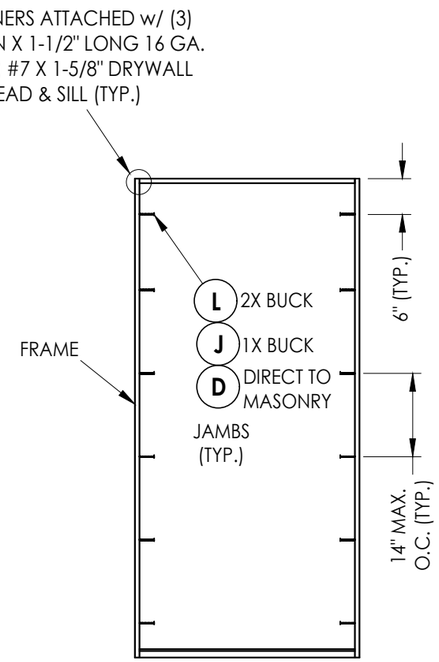

X

FRAME ANCHORING

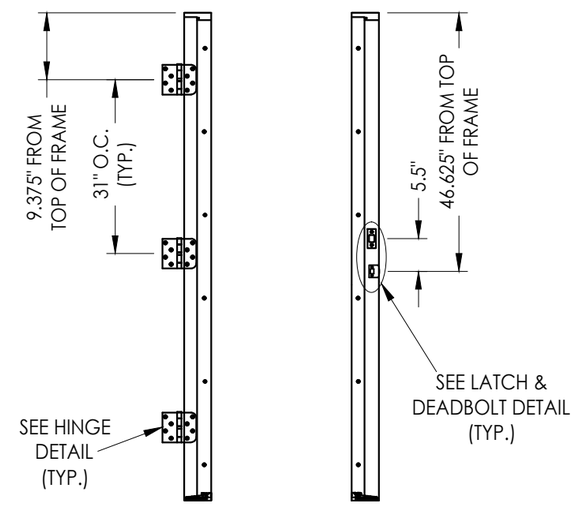

HINGE JAMB **STRIKE JAMB**

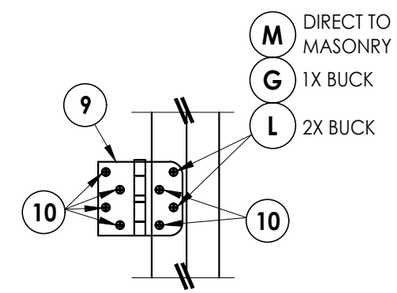

HINGE DETAIL
INSWING

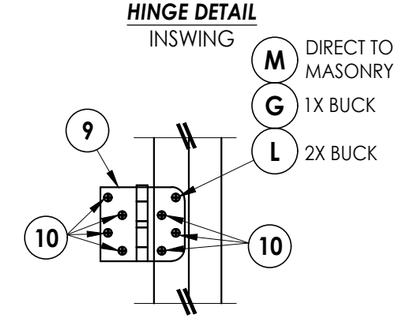

HINGE DETAIL
OUTSWING

CONCRETE ANCHOR NOTES:

1. *Concrete anchor locations at the corners may be adjusted to maintain the min. edge distance to mortar joints.*
2. *Concrete anchor locations noted as "MAX. ON CENTER" must be adjusted to maintain the min. edge distance to mortar joints, additional concrete anchors may be required to ensure the "MAX. ON CENTER" dimension are not exceeded.*
3. *Concrete anchor table:*

ANCHOR TYPE	ANCHOR SIZE	MIN. EMBEDMENT	MIN. CLEARANCE TO MASONRY EDGE	MIN. CLEARANCE TO ADJACENT ANCHOR
ITW TAPCON®	1/4"	1-1/4"	2"	4"
DeWALT ULTRACON®+	1/4"	1-1/4"	1"	4"
ITW TAPCON®	3/16"	1-1/4"	3"	1-1/2"

WOOD SCREW INSTALLATION NOTES:

1. *Maintain a minimum 5/8" edge distance, 1" end distance, & 1" o.c. spacing of wood screws to prevent the splitting of wood.*

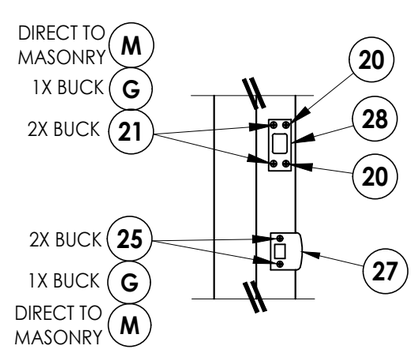

KWIKSET HARDWARE

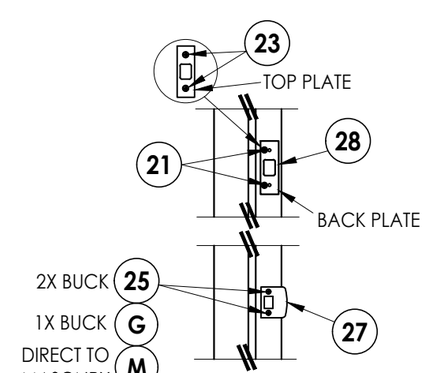

SCHLAGE HARDWARE

LATCH & DEADBOLT STRIKE PLATE DETAILS

Documents Prepared By:
Lyndon F. Schmidt
P.E. No. 43409
RW BUILDING CONSULTANTS, INC.
P.O. Box 230, Valrico, FL 33595
Phone No.: 813.659.9197
FBPE Registry No. 9813

PRODUCT: *PDUSA, INC. PD DOOR MOUNT*

PART OR ASSEMBLY: *BUCK & FRAME ANCHORING*

NO.	DATE	BY
2	7/01/26 UPDATE TO 9TH ED. (2026) FBC	LFS
1	10/4/23 UPDATE TO 8TH ED. (2023) FBC	LFS

REVISIONS

DATE: 12/05/22
SCALE: N.T.S.
DWG. BY: RW
CHK. BY: LFS
DRAWING NO.: FL-41814.1
SHEET 9 OF 10

© 2022 R.W. Building Consultants Inc.

G:\PDUSA\FL-41814 R2\FL-41814.1.dwg

BILL OF MATERIALS

ITEM #	DESCRIPTION	MATERIAL
A	1X BUCK (SG >= 0.42)	WOOD
B	2X BUCK (SG >= 0.42)	WOOD
C	1/4" MAX. SHIM SPACE	-
D	1/4" X 2-3/4" PFH DeWALT OR ITW CONCRETE SCREW	STEEL
E	MASONRY - 3,000 PSI MIN. CONCRETE CONFORMING TO ACI 301 OR HOLLOW BLOCK CONFORMING TO ASTM C90	CONCRETE
G	3/16" X 3-1/4" PFH ITW CONCRETE SCREW	STEEL
J	1/4" X 3-3/4" PFH DeWALT OR ITW CONCRETE SCREW	STEEL
L	#10 X 2-1/2" PFH WOOD SCREW (1.15" MIN. EMBEDMENT)	STEEL
M	3/16" X 2-1/4" PFH ITW CONCRETE SCREW	STEEL
1	FINGER JOINT PINE JAMB	COMP
7	WEATHERSTRIP	FOAM
8	SWEEP	VINYL
9	4" X 4" HINGE	STEEL
10	#9 X 3/4" PFH WOOD SCREW	STEEL
13	INSWING THRESHOLD	ALUM/COMP
14	OUTSWING THRESHOLD	ALUM/COMP
20	#9 X 1/2" PFH WOOD SCREW	STEEL
21	#12 X 2-1/2" PFH WOOD SCREW	STEEL
23	#8 X 3/4" PFH SMS	STEEL
25	#8 X 2-1/2" PFH WOOD SCREW	STEEL
27	LATCH STRIKE PLATE	STEEL
28	DEADBOLT STRIKE PLATE	STEEL
40	DOOR PANEL	-
51	INTERIOR FRAME (PD DOOR MOUNT SERIES)	ALUM
52	EXTERIOR FRAME (PD DOOR MOUNT SERIES)	ALUM
53	INTERIOR SECURITY PANEL (0.045" STEEL)	STEEL
56	#10-32 X 2" FH MACHINE SCREW w/ RIVET NUT	STEEL
58	#10-32 X 1/2" PH MACHINE SCREW w/ RIVET NUT	STEEL
59	DRIP TOP w/ (2) #6 X 3/4" PFH SMS	ALUM
60	#6 X 3/4" PFH SMS	S.S.
62	WEATHERSTRIP	-
63	DOG DOOR PIVOT	-
64	SPRING CAPS	-

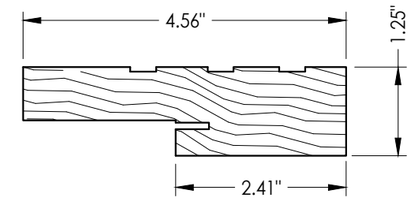

1 WOOD JAMB

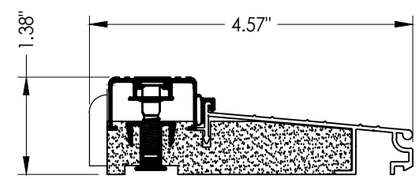

13 INSWING THRESHOLD
AFCO

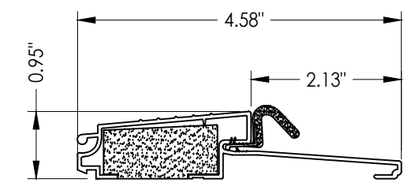

14 OUTSWING THRESHOLD
AFCO

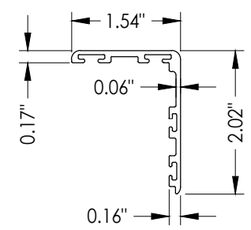

51 INTERIOR FRAME

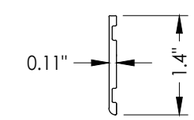

52 EXTERIOR FRAME

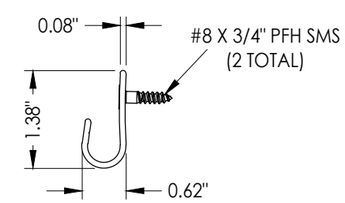

59 DRIP TOP

Documents Prepared By:
Lyndon F. Schmidt
P.E. No. 43409

RW BUILDING CONSULTANTS, INC.
P.O. Box 230, Valrico, FL 33595
Phone No.: 813.659.9197
FBPE Registry No. 9813

PRODUCT: PDUSA, INC. PD DOOR MOUNT

PART OR ASSEMBLY: BILL OF MATERIALS & COMPONENTS

REVISIONS

NO.	DATE			BY
2	7/01/26	UPDATE TO 9TH ED. (2026)	FBC	LFS
1	10/4/23	UPDATE TO 8TH ED. (2023)	FBC	LFS

DATE: 12/05/22
SCALE: N.T.S.
DWG. BY: RW
CHK. BY: LFS
DRAWING NO.: FL-41814.1
SHEET 10 OF 10

© 2022 R.W. Building Consultants Inc.

G:\PDUSA\FL-41814 R2\FL-41814.1.dwg